METEOROLOGICAL OFFICE
23 JUL 1979
LIBRARY

LONDON, METEOROLOGICAL OFFICE.

Met.O.16 Branch Memorandum No.4.

Time-domain bandstop filtering using a reference frequency. By LEE,A.C.L.

London,Met.Off.,Met.O.16 Branch Mem. No.4,1979,31cm.Pp./ii/+11,8 pls.6 Refs.Abs. p./ii/.

An unofficial document - restriction on first page to be observed.

Y42.J2
National Meteorological Library and Archive
Archive copy - reference only

MET O 16 BRANCH MEMO NO 4

METEOROLOGICAL OFFICE
23 JUL 1979
LIBRARY

1298[illegible]

TIME-DOMAIN BANDSTOP FILTERING USING A REFERENCE FREQUENCY

by A C L Lee

This document represents the opinion of the author, and does not necessarily reflect the official view of the Meteorological Office. It should not be quoted except as a private communication with the written permission of the author.

FH53

June 1979

ABSTRACT

In the Sferics Trial project there is a requirement for narrow band-reject high-order filters for removing man-made transmissions from lightning waveforms. To maintain the necessary narrow-band profile, and high stability, a technique has been developed involving frequency shifting the waveform by a stable reference frequency which becomes the band-stop centre frequency. This has the advantage that the centre frequency can be switched.

Two types of hardware or software filter were developed: a Chebychev-based filter having a discriminating frequency profile, and a Bessel-based filter which has an advantageous transient response. Unlike Fourier techniques, the spectral resolution of the band-stop profile is not limited by the existence of discrete time-windows in the data; and the technique should be applicable to the removal of narrow-band noise of varying frequency, or even amplitude (such as aero-engine vibration) provided a reference is available.

1. Introduction

1.1 This document is a condensation of a number of Enclosures in Ref 1, and describes the results of work on Bandstop Filters associated with the Sferics Trial project.

1.2 Part of the aims of this project was to record lightning waveforms (Sferics) at several stations, together with timing data on the waveforms. By comparing waveforms from different locations, the arrival time difference could be determined, and with a minimum of three stations the original flash could be located using methods analogous to those of Loran-C navigation.

1.3 To obtain accurate time-differences, the noise due to man-made transmitters (which appear within the 1-50 KHz band used) had to be removed using band-stop filters. If a narrow-band profile can be used, this affects the Sferic waveform least, and makes the filtered waveform less sensitive to the details of the filter; although a limit is reached at the bandwidth of the interfering signal, typically 50-100 Hz. As the bandwidth is reduced to fit the transmission, the stability of the profile, and of the centre frequency, becomes important for a different reason: a shift of 5 Hz or so, or a reduction in attenuation, can mean that a transmission is not effectively suppressed.

1.4 Some experiments were tried with high quality double "wave trap" circuits using optimum magnetic materials, core dimensions, Litz wire, and Silver Mica capacitors. To obtain the necessary attenuation at the high notch "Q" values required, some careful electronic "Q-multiplication" of the coils was necessary. The designs were successful (Ref 1, E1), and were actually used in the Sferics Trials, but were vulnerable to small changes in the properties of the resonant components. The centre frequency of the stop-band was, of course, fixed.

1.5 Another problem in the Sferics Trial is the fact that about 400 transmitters are licensed to operate at significant power between about 10 and 40 KHz. Although only a small number produce significant interference at any one time, unusual frequencies do appear intermittently. It is impractical to cater separately for each potential interfering band, even if unnecessary filters are switched out to avoid cumulative waveform distortion.

1.6 Instead, a technique of band-stop filtering using frequency shifting was developed. A stable reference frequency, which becomes the stop-band centre, is used to shift an unwanted band to low frequencies, where it can be filtered accurately, before being shifted back to its original frequency. Accuracy of filtering is maintained, even using moderate tolerance components, in spite of extreme relative narrowness of the required stop-band. The stable reference can be synthesised from a standard frequency, and switched to alternative frequencies giving the band-stop filter "agility". Thus the filter is highly stable, and a small number of filters can be switched to necessary frequencies. This approach has the advantage that notch filters can substitute for each other in case of component failure on some of the filters.

2. Bandstop Filters using Frequency Changing

2.1 A Bandstop Filter using Frequency Changing is shown in Fig 1. The signal S_{IN} passes through a summing junction, is amplified with gain A, and the total output signal is S_{OUT}. S_{OUT} passes into a filter consisting of four multipliers and two identical low-pass filters F(s). This acts as a bandpass filter centered on ω_o, the frequency of the references S_0 and S_Q. This bandpass filter has high gain at the bandpass centre, so that with A negative, the complete circuit of Fig 1 acts as a band-stop filter.

2.2 The first two multipliers A, B multiply S_{OUT} by the reference frequency S_o (at ω_o which will become the bandstop centre), and its phase quadrature S_Q. This produces sum and difference frequencies, of which the former are removed, and the latter are suitably filtered and passed by F(s) without the need for critical tolerances on components. An alternative description of this process is that each of the multipliers A, B, in conjunction with its respective F(s), acts as a phase sensitive detector. These resolve the S_{OUT} frequencies near ω_o into separate amplitude modulated signals on phase and phase quadrature carriers, perform independent detection processes, and produce waveforms corresponding to the envelopes of the original resolved signals in S_{OUT}.

2.3 The remaining two multipliers (C,D) up-convert the difference signals to their original frequency (amplitude modulate S_o and S_Q), and the results are summed back to the amplifier input to null out frequencies near ω_o.

2.4 Appendix A describes in some detail how the four multipliers and two filters F(s) are equivalent to a low-pass filter shifted in frequency to a new origin of ω_o, ie a bandpass filter having a transfer function G(s), where $G(s) = \frac{1}{2}\{F(s-s_o) + F(s+s_o)\}$. This expression is correct provided that $F(2j\omega_o + j\delta\omega_1)$ is negligibly small for the required purposes for all values of $\delta\omega_1$ from $-\omega_o$ to $+\infty$ (Condition "A").

2.5 If F(s) has a high gain at low frequencies, eg an integrator, then G(s) has a high gain at the bandpass centre ω_o. Provided stability can be ensured, negative feedback around the amplifier A can thus be arranged so that the transmission from S_{IN} to S_{OUT} is low near ω_o. This is, in essence, a nulling method, and high attenuation can be achieved near ω_o.

2.6 The stability of ω_o is determined by that of So which can be arbitarily high, and the profile of the bandstop is determined by F(s) independently of the effective Q of the notch. By changing ω_o the bandstop filter becomes "agile". By choosing suitable values for A, and suitable transfer functions for F(s), highly stable high order narrow bandstop filters can be synthesised with predictable properties.

3. First Order Bandstop Filter (Simple Notch)

3.1 As an aid to understanding, consider a simple system where $F(s) = \frac{1}{s\tau}$, ie a pure integrator.

The Band-Pass filter G(s) is given by:

$$G(s) = \frac{1}{2\tau}\left\{\frac{1}{(s-s_o)} + \frac{1}{(s+s_o)}\right\} = \frac{s}{\tau(s^2 - s_o^2)}$$

Fig 1 can now be simplified to Fig 2 where $P_1(s) = A$

$$P_2(s) = \frac{s}{\tau(s^2 - s_o^2)}$$

According to a well-known theorem in Control Theory (Ref 2, chapter 7), the overall transfer function $T(s)$ is given by

$$T(s) = \frac{P_1(s)}{1 - P_1(s).P_2(s)} = \frac{A(s^2 + \omega_o^2)}{\left(s^2 - \frac{As}{\tau} + \omega_o^2\right)}$$

If A is a negative number (corresponding to negative feedback) $T(s)$ corresponds to a simple "wave-trap" type of notch with a centre frequency of ω_o and a "quality factor" $Q = \frac{\tau\omega_o}{-A}$, which can be arbitarily high. With A negative, the nulling action can be clearly seen.

4. Polynominal Bandstop Filter

4.1 It is possible to choose A, F(s) to implement higher order filters having higher performance in some specified way. In the Sferics application we require bandstop filters having a suitably high attenuation over a narrow band, and minimum attenuation outside the band. These are required to remove FSK signals from VLF transmitters contaminating Sferics data. By going to as narrow a bandwidth as possible, for a fixed number of poles, we distort the Sferic waveform least.

4.2 A transfer function having the right sort of properties for this application is based on the low-pass prototype of a Chebychev Polynominal filter $P_L(s)$ (Ref 2,3). This low-pass filter has a small defined equi-ripple in the passband, and attenuates as strongly as possible in the stop-band given the limitation on the number of poles, and the allowed pass-band ripple.

4.3 A high-pass Chebychev $P_H(s)$, where $P_H(s) = P_L\left(\frac{\omega_c}{s}\right)$ has a corner frequency ω_c, and an attenuation characteristic which is the "mirror image" of $P_L(s)$ when shown on a suitably normalised log frequency scale (Ref 3).

4.4 If one considers $P_H(s)$ on a linear frequency scale from frequencies $\omega = -\infty$ to $+\infty$, $P_H(s)$ represents a "notch" filter centred on zero frequency. For a "narrow" band-stop filter, the transfer function $P_H(s)$ must be insignificantly different from complex unity for $s < -j\omega_o$ and $s > j\omega_o$. We will call this "Condition B". In this case a band-stop transfer function $B(s)$ having nearly the same profile as $P_H(s)$ can be obtained by shifting the notch frequency by $\pm \omega_o$:

$$B(s) = P_H(s - j\omega_o) \cdot P_H(s + j\omega_o)$$

$B(s)$ has the necessary property of a realizable filter that the transfer function at $(-\omega)$ is the complex conjugate of the transfer function at (ω).

4.5 We intend to implement our band-stop filter using a circuit similar to Fig 2:

$$T(s) = B(s) = P_H(s - j\omega_o) \cdot P_H(s + j\omega_o) = \frac{P_1(s)}{1 - P_1(s) \cdot P_2(s)}$$

$$= \frac{A}{1 - \frac{A}{2}\left\{F(s - s_o) + F(s + s_o)\right\}}$$

where $F(s)$ is the low-pass filter shown in Fig 1.

To solve for $F(j\omega)$, substitute $\omega_1 = \omega_o + \delta\omega_1$, where $\delta\omega_1 \ll \omega_o$.

Then: $P_H(s + j\omega_o) = P_H(2j\omega_o + j\delta\omega_1) \simeq 1$ by Condition "B"

also: $F(s + j\omega_o) = F(2j\omega_o + \delta\omega_1) \simeq 0$, provided that Condition "A" is satisfied (this will be demonstrated later).

Then the equation simplifies, and can be re-arranged to give:

$$F(j\delta\omega_1) = 2\left\{\frac{1}{A} + \frac{1}{P_H(j\delta\omega_1)}\right\}$$

4.6 We are now in a position to use the known form of $P_H(s)$ to give further simplifications.

$$P_L(s) = \frac{1}{1 + a_1 s + a_2 s^2 + \cdots + a_n s^n}$$

$$P_H(s) = P_L\left(\frac{\omega_c}{s}\right) = \frac{1}{1 + a_1\left(\frac{\omega_c}{s}\right) + a_2\left(\frac{\omega_c}{s}\right)^2 + \cdots + a_n\left(\frac{\omega_c}{s}\right)^n}$$

$$\text{Thus } F(s) = 2\left\{\frac{1}{A} + 1 + a_1\left(\frac{\omega_c}{s}\right) + a_2\left(\frac{\omega_c}{s}\right)^2 + \cdots + a_n\left(\frac{\omega_c}{s}\right)^n\right\}$$

If we choose A = −1, then at higher frequencies ($s \gg j\omega_c$) it becomes possible for $F(s)$ to be small, so that Condition "A" can be satisfied. So:

$$F(s) = \left(\frac{2a_1\omega_c}{s}\right)\left\{\frac{\left(\frac{s}{\omega_c}\right)^{n-1} + \frac{a_2}{a_1}\left(\frac{s}{\omega_c}\right)^{n-2} + \cdots + \frac{a_n}{a_1}}{\left(\frac{s}{\omega_c}\right)^{n-1}}\right\}$$

The first term is an integrator of gain $2a_1\omega_c$, similar to the first order case. The second bracket can have its numerator factorised, and so be broken down into:

a. A factor $\frac{(s-\sigma_0)}{s}$, representing a real zero and a pole at the origin, if n is even.

b. $\frac{(n-2)}{2}$ if n is even, or $\frac{(n-1)}{2}$ if n is odd, factors of the form:

$$\frac{(s - \sigma_f + j\omega_f)(s - \sigma_f - j\omega_f)}{s^2}$$

Each represents a pair of complex conjugate zeroes, with two poles at the origin.

Thus we have now succeeded in finding an expression for $F(s)$ which implements the required notch filter function $B(s)$, and which can be broken down into small realizable units. The above analysis is valid for any order of any type of polynomial notch filter. Satisfaction of Condition A can be judged by comparing performance with that predicted.

4.7 In the Sferics application a 5th Order 0.1 dB Chebychev low-pass prototype was chosen, denormalized to give a 3 dB attenuation corner frequency ω_c at $(2\pi 85)$ radians/sec and manipulated into a notch filter. This notch filter gives a minimum of 30 dB attenuation within ± 50 Hz of the notch centre ω_0. Fig 3 shows the attenuation and phase-shift of such a filter centred on 15975 Hz, calculated from $B(s)$.

The Low-Pass prototype with $\omega_c = 1$ (from Ref 1 E5) is given by:

$$(P_L(s))^{-1} = 1 + 3.978773\ s + 7.540236\ s^2 + 9.892598\ s^3 + 7.067299\ s^4 + 4.599514\ s^5$$

Evaluating F(s), and factorising the numerator using Ref 6 Section III.4 (Complex roots of a polynomial), we find the following factors to F(s):

$$F(s) = \left(\frac{7.95755\ \omega_c}{s}\right)\left(\frac{(s-\sigma_1+j\omega_1)(s-\sigma_1-j\omega_1)}{s^2}\right)\left(\frac{(s-\sigma_2+j\omega_2)(s-\sigma_2-j\omega_2)}{s^2}\right)$$

$$(\sigma_1\ ,\ \omega_1) = (-0.8595031\ \omega_c\ ,\ 0.7367920\ \omega_c)$$

$$(\sigma_2\ ,\ \omega_2) = (-0.08805487\ \omega_c\ ,\ 0.9456471\ \omega_c)$$

$$\omega_c = 2\pi 85$$

In the Sferics application F(s) is implemented in analogue hardware using an integrator for the first term, and the circuit of Fig 4(a) for each of the second and third terms. The same functions could be implemented using digital recursive techniques as described in Ref 5 Section 4(c), (d).

5. Some Limitations of the Analogue Polynomial Band-Stop Filter Using Frequency Changing

5.1 Unfortunately analogue hardware does not correspond to the ideal mathematical abstraction shown in Fig 1, although the deficiencies can be countered, and a filter produced that corresponds very closely to the predicted filter.

5.2 Each analogue multiplier shown in Fig 1 has four potential adjustments: D.C. offsets in the two inputs and the output, and overall gain. In practice the 16 potential adjustments within the closed loop are catered for by having gain adjustment on each of the two channels, and D.C. offset adjustments at the outputs of multipliers A and B. Correct gain assures the required transfer function of the overall filter, and gains are balanced to avoid a "beating" effect at the filter output for partially attenuated frequencies near ω_o. Poor offset adjustment gives rise to voltages which the loop "assumes" occur because of a constant input signal present at ω_o. The filter injects a signal "nulling" this, so the result is a constant amplitude V_{out} signal at ω_o. Offsets are adjusted to remove this signal. Spurious signals at ω_o can also be produced by large offsets in S_o or S_Q combined with large D.C. levels present at S_{out}. Some care is taken in the production of S_o S_Q; a non-critical D.C. offset trimmer is provided for amplifier A in Fig 1; and S_{IN} is arranged to avoid large D.C. signals. This total of five essentially independent adjustment points allows spurious ω_o to be trimmed relatively easily to a level of about 10 mV, where other forms of noise, and non-linear generation of multiples of ω_o become a limitation.

5.3 Root Locus Analysis of the 0.1 dB Chebychev band-stop implementation described above (Ref 2 Chapter 13; Ref 1 E10; using Met O 16 program LRTLOCUS) reveals that the main feedback loop is only conditionally stable, and the loop becomes unstable if the gain is reduced by a factor of 1.97 below its nominal value. Under normal operation this is no problem, but during episodes such as switch-on, during which one power supply may appear before the other, one or more of the five integrators in series may saturate against the supply rails. Under these conditions gain falls, and the loop becomes unstable, causing further saturation. The solution is to reset the integrators if signal saturation is detected. This is conveniently done by shorting points XY in Fig 4(a) in the individual complex conjugate zero-pair circuits, as these then become heavily damped; and the remaining main loop becomes unconditionally stable. This forced recovery can be made faster than the natural recovery of an unconditionally stable filter after temporary non-linear operation. It is easy to design the overall filter so that it does not saturate for any input signal, as for this odd order filter (which never gives gain) the maximum signal injected is twice the input signal at ω_o, when the predicted response requires a 180° phase shifts (actually 0° after the negative gain). The Root Locus Analysis also shows that the overall response in the region of the notch is not unduly sensitive to smaller variations in gain.

5.4 For the Sferics application the filter response is sufficiently narrow to require highly stable values of ω_o. In addition the potential agility of the filter in changing ω_o is of interest. Fig 5 shows the provisional circuit used (Drawing 13921). The signals S_o and S_Q (Phase Reference and Phase Quad Reference) are obtained from a standard 10 MHz reference (Clock) using Rate Multipliers U1, U2, and binary dividers U3, U4. The Rate Multipliers introduce small phase jumps in ω_o of 0.1 µS. Stepped sin and cos waveforms are generated from R.O.M. (U5,U6) and D.A.C (U7, U8), and the harmonic frequencies are largely removed by 3-Pole Butterworth Filters (U9-U12). Details of design performance are in Ref 1 E7,E8; but the intention is that spurious frequencies due to stepping should be 60 dB down on the fundamental. On Fig 5, U13 is the -1 amplifier; U14, U15, U18, U19 are the analogue multipliers (where a cheap non-trimmed type can be used); U16, U17, U20, U21 implement the two filters F(s); and U22, U23 implement the reset. The trimmer for U13 has not been shown, and there are a number of other minor errors in Fig 5.

6. Clock Coherent Bandstop Filter

6.1 The analogue Chebychev Bandstop Filter is tailored to remove a band of noise from an analogue waveform. The bands to be removed are roughly constant in amplitude over about 50-100 Hz, and so a Chebychev type of bandstop (nearly square) affects the minimum frequency range in the data. Sferic waveform data is collected over time windows 10.24 mS wide, giving a resolution of around 97.66 Hz to first diffraction minimum when using Fourier filtering techniques. It can be seen that the Chebychev Bandstop filter has considerable and significant variations in attenuation over frequency regions much narrower than this, and so is much more discriminating. This discrimination is achieved because its impulse response extends over a long period of time (of the order of 100 mS). The impulse response of the Bandstop filter does not cause serious Sferic waveform distortion because, apart from an initial impulse, the ringing is of low amplitude. This is so because only a small frequency region is involved (hence little energy), and because the ringing is extended in time. This is particularly true if Fourier phase correction can be applied to the recorded data as phase shift extends over a wider frequency region than attenuation.

6.2 Unfortunately the Analogue Chebychev Bandstop Filter is prone to injection of "constant amplitude" noise at ω_o as shown in para 5.2 above. The effect need not be serious if sufficient gain is provided before the notch filter, but is inconvenient as it reduces dynamic range. In the Sferics equipment the problem is accentuated by offsets apparently caused by variation of the supply voltages to the notch filters. Thus there is a further requirement to remove a signal which is highly coherent with a reference (the local clock, which is also based on the 10 MHz standard). Variations of this signal can be regarded as amplitude modulations on the S_o and S_Q carrier references.

6.3 To remove this signal we can use a software Bandstop Filter on the recorded data using the local clock as a reference. Software multipliers do not suffer from the offset which give rise to injected noise at ω_o. The filter will operate even though we only have discontinuous "windows" of 10.24 mS, because of the high coherence of the signal (unlike the original VLF transmissions). By using narrow band-stop filters (say an order narrower than the Chebychev Band-Stop), the recorded data will be disturbed least, while a coherent sine-wave will be efficiently removed. Unfortunately, there are likely to be discontinuities in the coherence caused by things like an imperfect knowledge of gain changes after the notch filter, an adjustment wire-wound potentiometer slipping in a power supply, or merely re-setting after losing epoch or on switch-on. If a 5th Order 0.1 dB Chebychev Band-notch filter is used with $\omega_c = 2\ \pi\ 8.5$ radians/sec, the envelope step response will not settle for the order of 1000 mS of data-time, or about 100 waveforms! The effect is important as significant energy now occurs within the region of the stop-band. This is a lot of data wasted while the filter simply measures the amplitude of the new coherent signal.

6.4 The emphasis has now shifted from the frequency domain to the time domain. What is required is a (frequency shifted) high-pass filter that discriminates frequencies as much as possible, but settles quickly and without ringing after a step response. A low-pass filter with this sort of characteristic is the Bessel filter $BESSEL(s)$, (Ref 3, Fig 10). A high-pass filter that retains the fuss-free step response is given by $H(s) = 1 - BESSEL(s)$. (Transfer functions are linear in both time and frequency domain). A corner frequency $\omega_c = (100/1.024)$, or $f_c = 15.54$ Hz, 5th order filter was tested as this would complete most of the step response after 4 waveforms (Ref 3, Fig 10). This was frequency shifted to 16 KHz using $H(s-j\omega_o) \times H(s+j\omega_o)$, and the attenuation and phase shift shown in Fig 6. Frequency is shown as frequency difference from 16 KHz. The attenuation and phase shift characteristics close to 16 KHz approximate a first-order bandstop filter, but further from 16 KHz the higher orders become more important and reduce the unwanted effects of the filter dramatically: outside $\pm$50 Hz attenuation is less than 0.2 dB, and phase-shift is less than 0.1 μS. It should be remembered that the analogue polynomial notch filter is designed to give at least 30 dB attenuation within $\pm$50 Hz. Thus a Bessel-based clock coherent filter will settle within 4 waveforms, and have remarkably little effect on the Sferics data. If implemented in software it will not give rise to injected noise.

6.5 In a manner analogous to Section 4, we can now find F(s),

given $B(s) = -\left\{1 - BESSEL\left(\frac{s-j\omega_o}{\omega_c}\right)\right\}\left\{1 - BESSEL\left(\frac{s+j\omega_o}{\omega_c}\right)\right\}$

$\omega_c = 2\ \pi\ 15.54$ radians/sec, and $BESSEL(s)$ is a polynomial filter.

A little algebra (Ref 1, E12) quickly gives:

$$F(s) = \frac{2\omega_c}{(\alpha_1 s)} \cdot \frac{1}{\left\{1 + \frac{\alpha_2}{\alpha_1}\left(\frac{s}{\omega_c}\right) + \frac{\alpha_3}{\alpha_1}\left(\frac{s}{\omega_c}\right)^2 + \cdots + \frac{\alpha_n}{\alpha_1}\left(\frac{s}{\omega_c}\right)^{n-1}\right\}}$$

where $BESSEL(s) = \dfrac{1}{1 + \alpha_1 s + \alpha_2 s^2 + \alpha_3 s^3 + \cdots + \alpha_n s^n}$

and A = −1 as before.

The first term is an integrator of gain $\frac{2\omega_c}{\alpha_1}$, while the second term represents a low-pass polynomial filter with unity gain at D.C., which can be factorised into poles and implemented in the usual ways (Ref 4).

6.6 Using a 5th Order Bessel Filter, we have:

$$(BESSEL(s))^{-1} = 1 + 2.423522s + 2.610425\,s^2 + 1.581605\,s^3 + 0.547579\,s^4 + 0.0884713\,s^5$$

The integrator gain = $0.825245\,\omega_c$, and the roots of the second term are given by:

$$(\sigma_i, \omega_i) = (-0.767096\,\omega_c, \pm 1.894341\,\omega_c), (-2.327573\,\omega_c, \pm 1.067984\,\omega_c)$$

where $\omega_c = 2\pi 15.54$

6.7 The Clock Coherent Filter is actually implemented in software, with $F(s)$ being a three-stage recursive digital filter (notation as in Ref 5, Section 5(a), (b), (d)). Data is stored every 10 μS of data time; and the first stage operates every 10 μS, and implements the integrator, and also a short time-constant which acts as an anti-alias filter:

Integrator: $T = 10^{-5}$, $K = 0.825245\,\omega_c$, $\omega_c = 2\pi 15.54$

$$v_1^*(n) = v_1^*(n-1) + 8.05775_{10}{}^{-4}\, v_{IN}^*(n)$$

Anti-Alias:

The three stages operate at sampling rates of 10 μS, 320 μS, and 640 μS. Once the first stage is passed, further stages contain low-pass filters that ensure no further significant aliasing into low frequencies. There is a critical band of input frequencies between 3125 Hz and 3075 Hz which is aliased at the first sampling rate change into frequencies between 0 and 50 Hz. Frequencies significantly below 3075 Hz are aliased into frequencies above 50 Hz, which according to Fig 6 do not get through $F(s)$. Frequencies above 3125 Hz will be adequately attenuated by the integrator if attenuation at 3125 Hz is sufficient. The ratio of integrator attenuation at 3075 Hz and 50 Hz is 61.5; an extra factor of 4.16 (12.4 dB) increases this to 256, the limit of 8-bit resolution.

Choose $e^{-aT} = 1 - 2^{-5}$; $T = 10^{-5}$ sec

then α^{-1} = 315.0 μS time-constant. This gives 15.8 dB attenuation at 3075 Hz, which is adequate.

$$v_2^*(n) = v_2^*(n-1) + \left(v_1^*(n) - v_2^*(n-1)\right)/32$$

In practice this extra pole will affect the transient response to some extent. If this is important, the anti-alias pole will have to be shifted to higher frequencies, compromising the anti-alias properties. A more satisfactory solution is to start with an even-order Bessel Filter, which generates a real pole naturally. If required, this can be split as in Ref 5.

The second stage operates every 320 μS ($T = 320_{10}-6$), and implements (σ_2 , ω_2):

$\alpha = -\sigma_2 = 227.2659$; $\omega = \omega_2 = 104.2727$

$C_1 = 2\cos(\omega T)\, e^{-\alpha T} = 1.8586776$

$C_2 = -e^{-2\alpha T} = -0.8646330$

$C_3 = 1 - C_1 - C_2 = 0.0059554$

$$v_3^*(m) = C_1\, v_3^*(m-1) + C_2\, v_3^*(m-2) + C_3\, v_2^*(m-1)$$

The attenuation of the second stage at 781.25 Hz (Nyquist for 640 μS sampling) is 51.7 dB. This should be adequate.

The third stage operates every 640 μS ($T = 640_{10}-6$), and implements (σ_1 , ω_1):

$\alpha = -\sigma_1 = 74.8998$; $\omega = \omega_1 = 184.9648$

$C_1' = 2\cos(\omega T)\, e^{-\alpha T} = 1.8930481$

$C_2' = -e^{-2\alpha T} = -0.9085805$

$C_3' = 1 - C_1' - C_2' = 0.0155325$

$$v_4^*(t) = C_1'\, v_4^*(t-1) + C_2'\, v_4^*(t-2) + C_3'\, v_3^*(t-1)$$

The final filter output is $v_4^*(t)$

7. Possible Further Developments

7.1 The two bandstop filters described above are examples of filters designed to remove fixed frequency noise of relatively constant amplitude in the Sferics application. In both cases the reference is synthetically generated.

7.2 The basic method can be developed to cope with rapid changes in noise amplitude if some knowledge of these changes is available. For the Sferics application Clock Coherent Filter, the data includes information on the switch settings which determine analogue gain before data recording. Gain changes are catered for within the software by having a corresponding gain adjustment after the software implementation of $F(s)$, and a complementary gain adjustment immediately before. The latter is required to keep the loop gain of the filter constant, and so maintain the transfer function $T(s)$.

7.3 Provided a suitable reference frequency is available, there is no reason why the notch frequency cannot be varied to follow a known noise source frequency. For example, if a requirement existed to suppress engine vibration induced noise in spite of variation of engine revs, then a constant amplitude reference could be phase-locked onto an accelerometer. It may be necessary to consider the effect of the phase-locked loop delay if this is a significant fraction of the notch delay.

7.4 A non-switched version of rapid gain following could be implemented using a filtered (amplitude varying) reference after $F(s)$. Significant gain changes would require complementary gain adjustment before $F(s)$, possibly involving a phase-locked loop, amplitude measurements and a divider. Computational delays in these latter devices may have to be considered. Combination with para 7.3 could provide effective vibration suppression.

7.5 For general vibration or similar suppression it is necessary to have a filter for each significant harmonic. However, an "open loop" method of suppressing harmonics would be to incorporate them in the reference signal after $F(s)$, although it may be wise to retain a pure fundamental for the noise monitoring reference to ensure that the fundamental is suppressed. Such a scheme would work well if the overall noise signal waveform could be reproduced from the reference transducer. An alternative scheme would be to use "boxcar" detection and injection methods based on the fundamental transducer frequency to give closed loop harmonic suppression.

REFERENCES

1.	Notch Filters	D/Met O 16f/88.
2.	Feedback and Control Systems	Di Stefano III, Stubberud, Williams. McGraw-Hill Book Company, Schaum's Outline Series, 1967.
3.	Smoothing and Filtering (Of Meteorological Data)	A.C.L.Lee. Met O 16 Branch Memo No 1, Feb 1977.
4.	Data-Base for Meteorological Filters.	A.C.L.Lee. Met O 16 Branch Memo No 2, Jan 1979.
5.	Implementation of Digital Filters Using Recursive Techniques	A.C.L.Lee. Met O 16 Branch Memo No 3, Feb 1977.
6.	Hewlett-Packard Calculator 9810A Math Pac Hewlett-Packard Co.	

APPENDIX A

BAND-PASS FILTERS INVOLVING FREQUENCY CHANGING

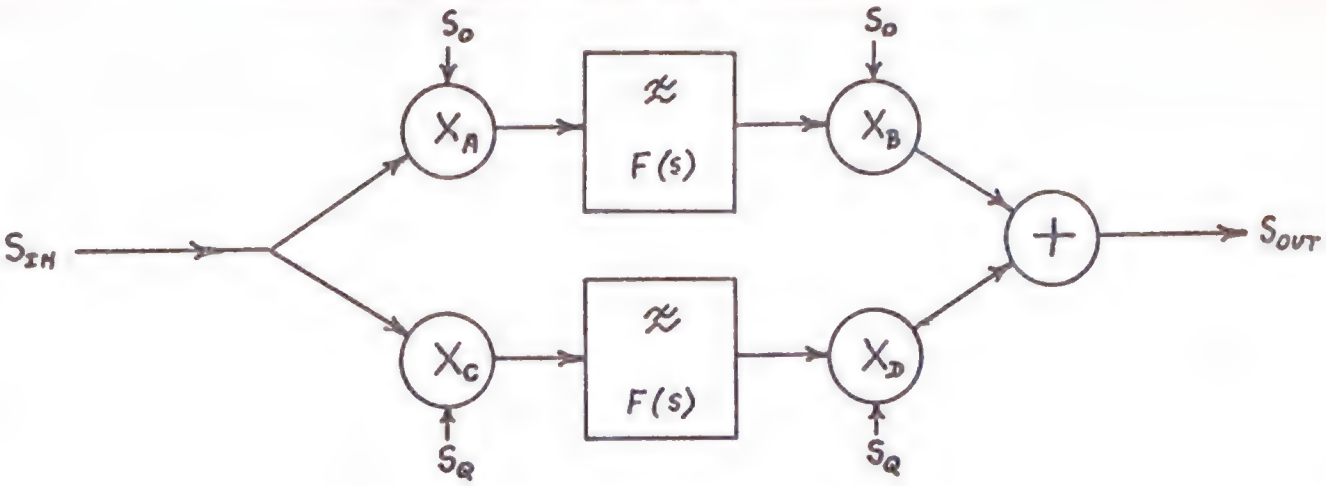

1. This appendix shows how, for the block diagram above, the Transfer Function $G(s)$ is equivalent to:

$$G(s) \simeq \frac{1}{2}\left\{F(s-S_o) + F(s+S_o)\right\}$$

Provided that $F(2j\omega_o + j\delta\omega_1)$ is negligibly small from $\delta\omega_1 = -\omega_o$ to $+\infty$

2. In the block diagram S_{IN} is multiplied by $\sin(\omega_o t + \phi)$ and $\cos(\omega_o t + \phi)$, signals S_o and S_Q respectively. The results are filtered by $F(s)$, multiplied again by S_o or S_Q, and the results summed to form S_{OUT}.

3. Consider S_{IN} to be a pair of harmonic signals at $(\omega_o + \delta\omega_1)$ and $(\omega_o + \delta\omega_2)$:

$$S_{IN} = A_1\left\{\frac{\ell^{j(\omega_o+\delta\omega_1)t} + \ell^{-j(\omega_o+\delta\omega_1)t}}{2}\right\} + A_2\left\{\frac{\ell^{j(\omega_o+\delta\omega_2)t} + \ell^{-j(\omega_o+\delta\omega_2)t}}{2}\right\}$$

and $$S_o = \left\{\frac{\ell^{j(\omega_o t+\phi)} + \ell^{-j(\omega_o t+\phi)}}{2}\right\}$$

4. The signal form X_A is:

$$= \frac{A_1}{4}\left\{\ell^{j(\overline{2\omega_o+\delta\omega_1}\,t+\phi)} + \ell^{-j(\overline{2\omega_o+\delta\omega_1}\,t+\phi)} + \ell^{j(\delta\omega_1 t-\phi)} + \ell^{-j(\delta\omega_1 t-\phi)}\right\} + \frac{A_2}{4}\left\{\text{---- similar expression in } \delta\omega_2 \text{ ----------}\right\}$$

representing sum and difference frequencies between S_{IN} and S_o.

5. The signal from $F(s)$ is:

$$= \frac{A_1}{4}\Big\{ F(2j\omega_o + j\delta\omega_1)\cdot e^{(\overline{2\omega_o+\delta\omega_1}\,t+\phi)} + F(-2j\omega_o - j\delta\omega_1)\cdot e^{-(\overline{2\omega_o+\delta\omega_1}\,t+\phi)}$$

$$+ F(j\delta\omega_1)\cdot e^{j(\delta\omega_1 t-\phi)} + F(-j\delta\omega_1)\cdot e^{-j(\delta\omega_1 t-\phi)}\Big\}$$

$$+ \frac{A_2}{4}\Big\{ \text{-------- similar expression in } \delta\omega_2 \text{ ----------} \Big\}$$

We will stipulate as "Condition A" that the form of $F(s)$ will be such that $F(2j\omega_o + j\delta\omega)$ will be negligibly small for the required purposes for all values of $\delta\omega$ from $-\omega_o$ to $+\infty$. This condition means that the effects of the "sum frequencies" are negligible, and simplifies the above expression. Physically, this means that we are discussing a "narrow" filter whose pass-band is narrow compared to ω_o.

6. To determine the signal from X_B, multiply by S_o:

$$= \frac{A_1}{8}\Big\{ F(j\delta\omega_1)\cdot e^{j(\omega_o+\delta\omega_1)t} + F(-j\delta\omega_1)\cdot e^{-j(\omega_o+\delta\omega_1)t}$$

$$+ F(-j\delta\omega_1)\cdot e^{j(\omega_o-\delta\omega_1+2\phi)} + F(j\delta\omega_1)\cdot e^{-j(\omega_o-\delta\omega_1+2\phi)}\Big\}$$

$$+ \frac{A_2}{8}\Big\{ \text{-------- similar expression in } \delta\omega_2 \text{ ----------} \Big\}$$

7. To determine the signal from X_D, repeat the whole process, but using S_Q as a reference signal. This is most easily done by replacing ϕ by $(\phi + \pi/2)$.

8. As $e^{j\pi} = -1$, when we add the signals from X_B and X_D to give S_{OUT}, the expressions involving ϕ cancel, giving:

$$S_{OUT} = \frac{A_1}{4}\Big\{ F(j\delta\omega_1)\cdot e^{j(\omega_o+\delta\omega_1)t} + F(-j\delta\omega_1)\cdot e^{-j(\omega_o+\delta\omega_1)t}\Big\}$$

$$+ \frac{A_2}{4}\Big\{ \text{----- similar expression in } \delta\omega_2 \text{ ----------} \Big\}$$

9. From this expression, we can deduce the following, subject to "Condition A":

a. The two harmonic signals in S_{IN} were propagated linearly and independently through the system. Thus the overall filter is linear in spite of the non-linear (multiplication) processes involved.

b. The attenuation at any frequency ω is 6 dB above that to be expected from the Low-Pass filter at a frequency $(\omega - \omega_o)$. As $F(\omega)$ is a complex number which can be expressed as $F = + e^{j\theta}$, the phase-shift at any frequency is that to be expected from the low-pass filter at $(\omega - \omega_o)$. The total effect is most easily described as having shifted the Low-Pass characteristic from the frequency origin to ω_o, and halved the gain.

10. For many purposes it is useful to have an explicit transfer function $G(s)$ for the overall filter. For any real filter $F(-j\omega) = F^*(j\omega)$, where the * denotes a complex conjugate. From "Condition A" we have $F(2j\omega_o + j\delta\omega)$ is small for $\delta\omega = -\omega_o \text{ to } +\infty$, and a similar expression for negative frequencies. Thus a suitable expression for $G(s)$, subject to "Condition A" is that:

$$G(s) = \left\{ F(s-s_o) + F(s+s_o) \right\}$$

The applicability of "Condition A" can be tested by comparing theoretical and actual curves, either for $G(s)$, or for the transfer function of an eventual notch filter.

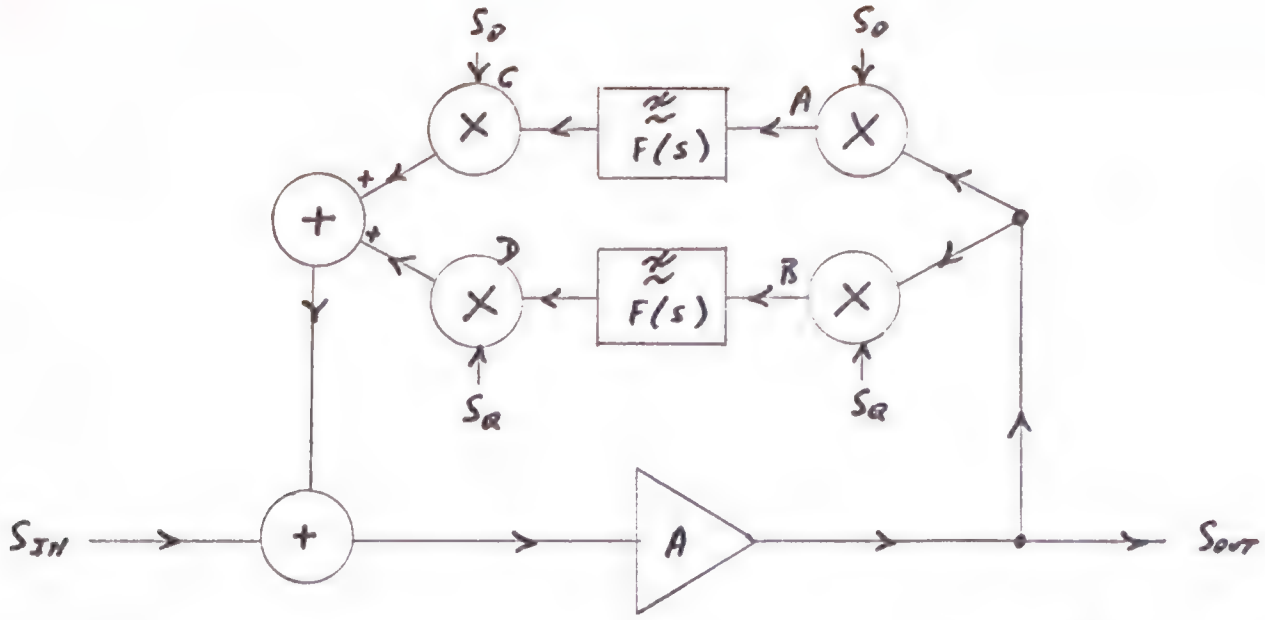

S_O : $\sin(\omega_0 t)$
S_Q : $\cos(\omega_0 t)$

Fig 1 Bandstop Filter using Frequency Changing.

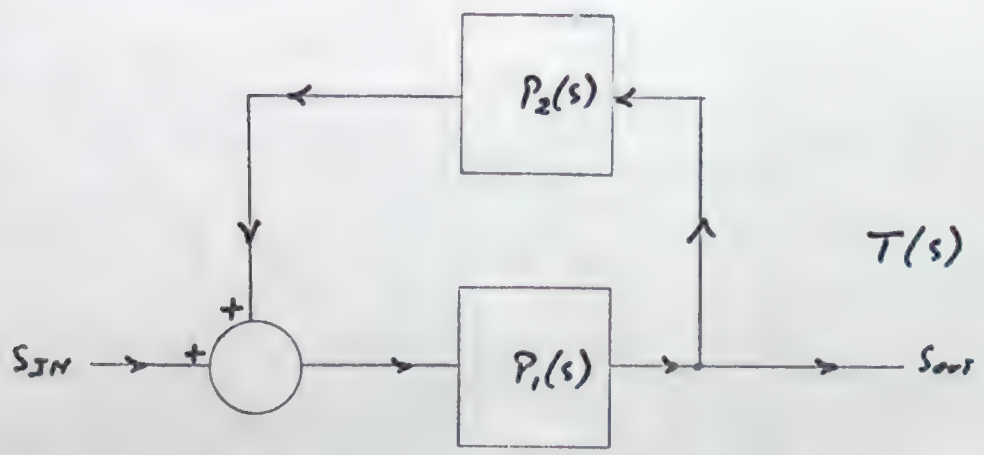

$$T(s) = \frac{P_1(s)}{1 - P_1(s) \cdot P_2(s)}$$

Fig 2 Simplified Block Diagram

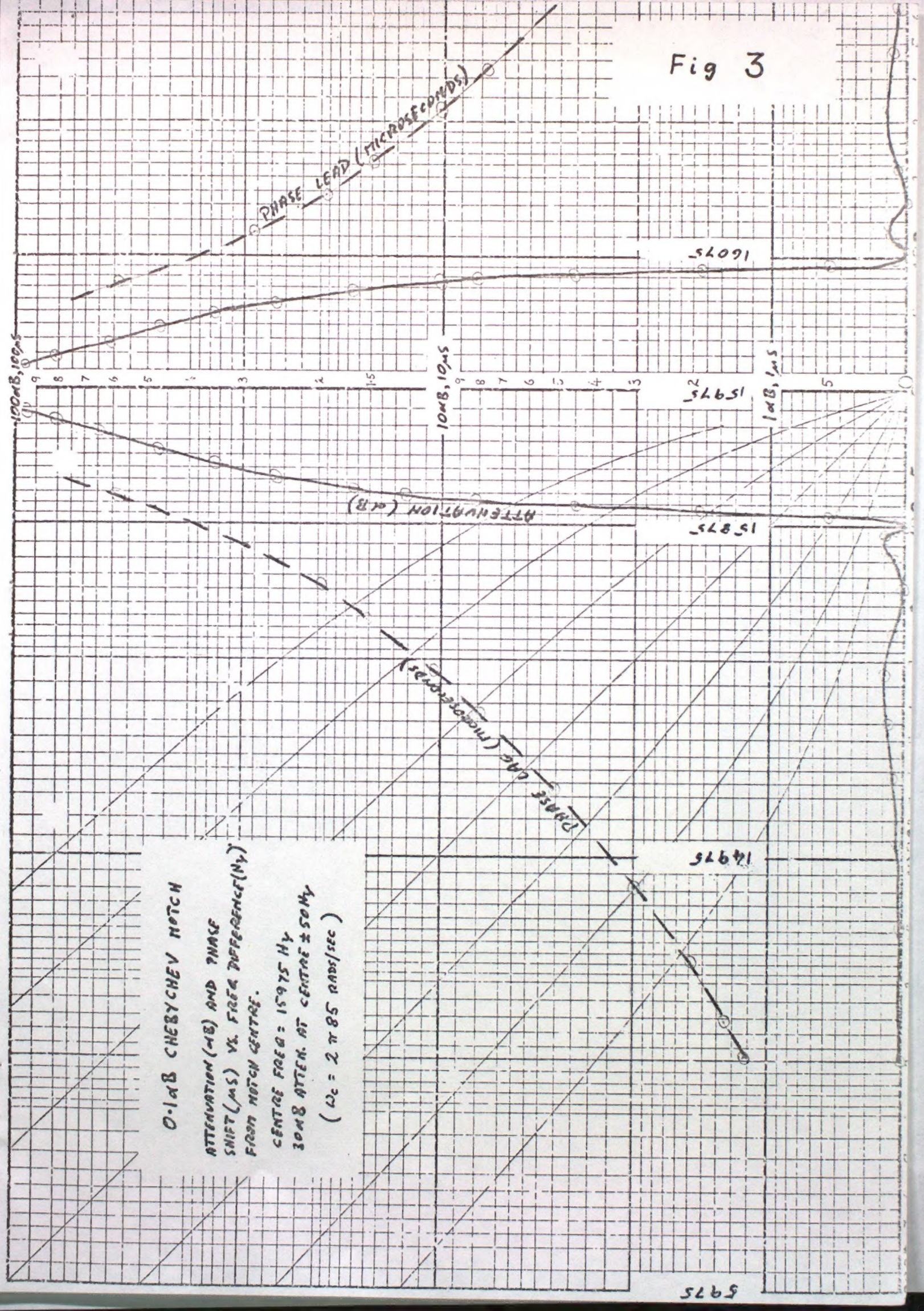

Fig 3
PHASE LEAD (MICROSECONDS)
16075
15975
15875
14975
5975
100dB, 100μS
10dB, 10μS
1dB, 1μS
ATTENUATION (dB)
PHASE LAG (MICROSECONDS)
0·1dB CHEBYCHEV NOTCH
ATTENUATION (dB) AND PHASE
SHIFT (μS) VS. FREQ DIFFERENCE (Hz)
FROM NOTCH CENTRE.
CENTRE FREQ = 15975 Hz
30dB ATTEN. AT CENTRE ± 50Hz
(ωc = 2π85 RADS/SEC)

(a) Complex Conjugate Zero-Pair

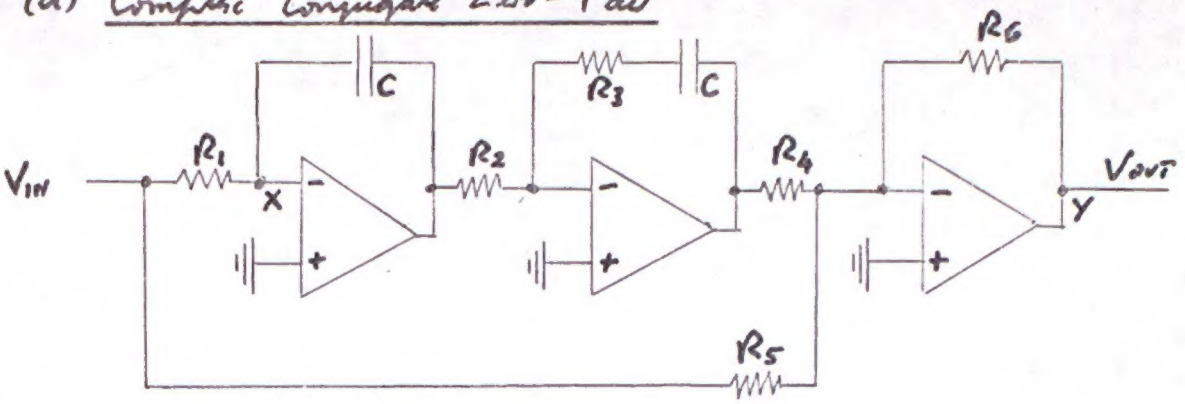

$$\frac{V_{OUT}(s)}{V_{IN}(s)} = -\frac{(s-\sigma_1+j\omega_1)(s-\sigma_1-j\omega_1)}{s^2} A$$

where: $A = \frac{R_6}{R_5}$; $R_3 = \frac{-2\sigma_1}{C(\sigma_1^2+\omega_1^2)}$; $\frac{R_6}{(R_1 R_2 R_4)} = C^2(\sigma_1^2+\omega_1^2)$

(b) Negative Real Zero

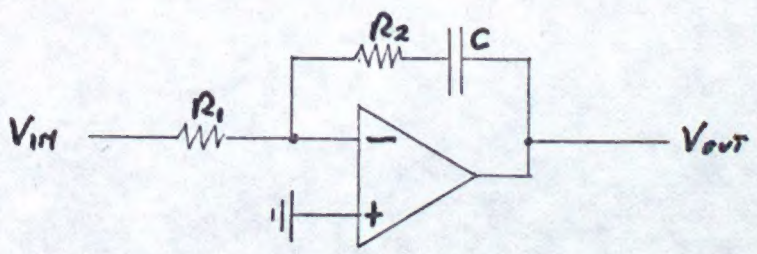

$$\frac{V_{OUT}(s)}{V_{IN}(s)} = -\frac{(s-\sigma_0)}{s} A$$

where: $A = \frac{R_2}{R_1}$; $\frac{1}{R_2 C} = -\sigma_0$

Fig 4 Some Useful Analogue Circuits.

AO 13921

THIRD ANGLE PROJECTION

DO NOT SCALE

REMOVE ALL BURRS

PROVISIONAL

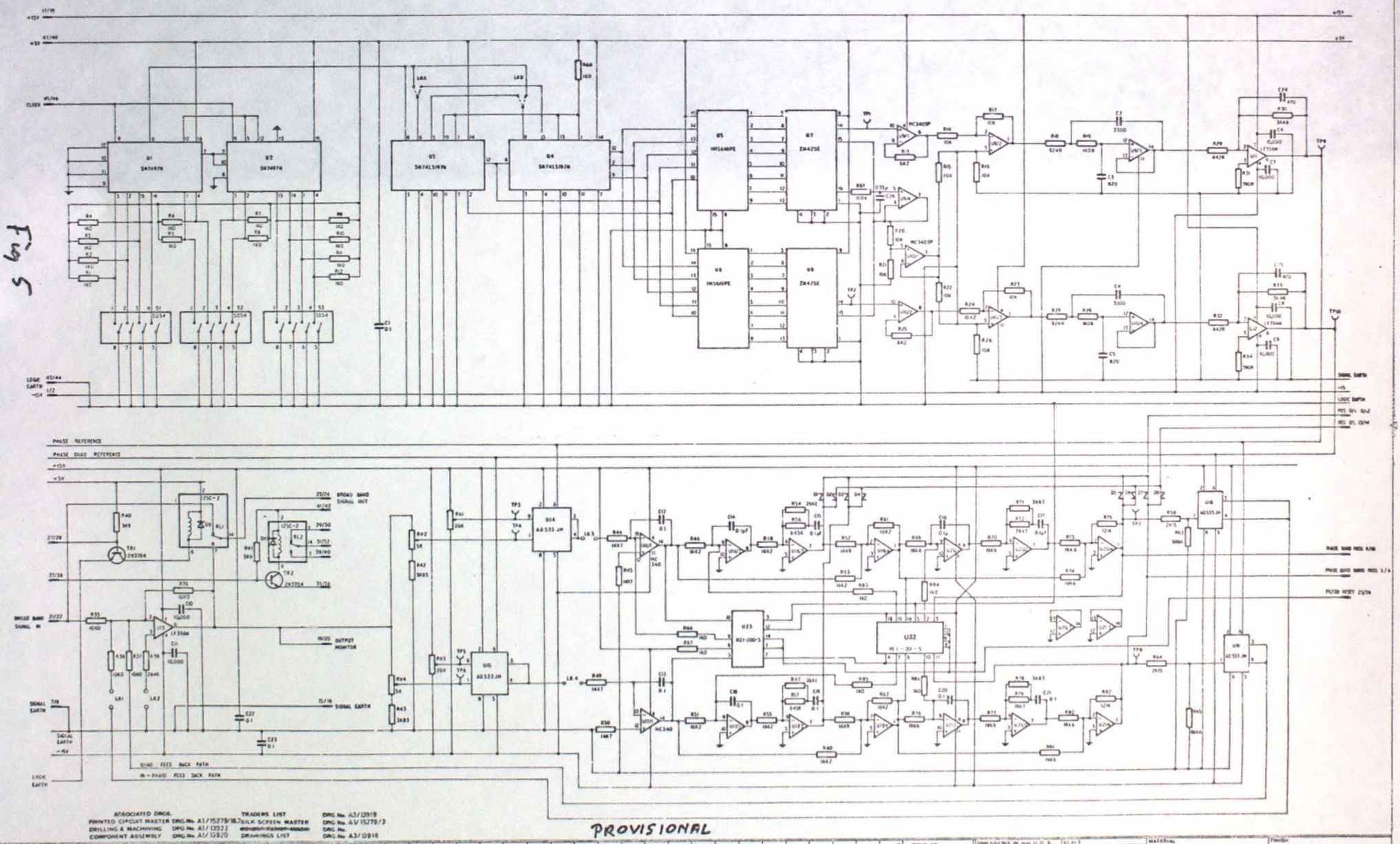

PROVISIONAL

ASSOCIATED DRGS.
PRINTED CIRCUIT MASTER DRG.No. A1/15279/1&2
DRILLING & MACHINING DRG.No. A1/13922
COMPONENT ASSEMBLY DRG.No. A1/13920

TRADERS LIST
SILK SCREEN MASTER DRG No. A3/13919
DRG No. A1/15279/3
DRG No.
DRAWINGS LIST DRG No. A3/13918

2	ISSUE No?	DIMENSIONS IN mm U.O.S.	SCALE	MATERIAL		Finish
4864	TASK No?	UNITS TOLERANCES				
	CHANGE NOTE No?	1 PLACE DEC		DRAWING LAST USED ON A1/13918		METEOROLOGICAL OFFICE
	DATE	DRWN DATE 15/12/77	CHD DATE	APP DATE	USED ON A1/13920	TASK 4864	AO 13921
PTB	DESIGNED BY	PTB		PTB			

POLYNOMIAL NOTCH FILTER - CIRCUIT DIAGRAM

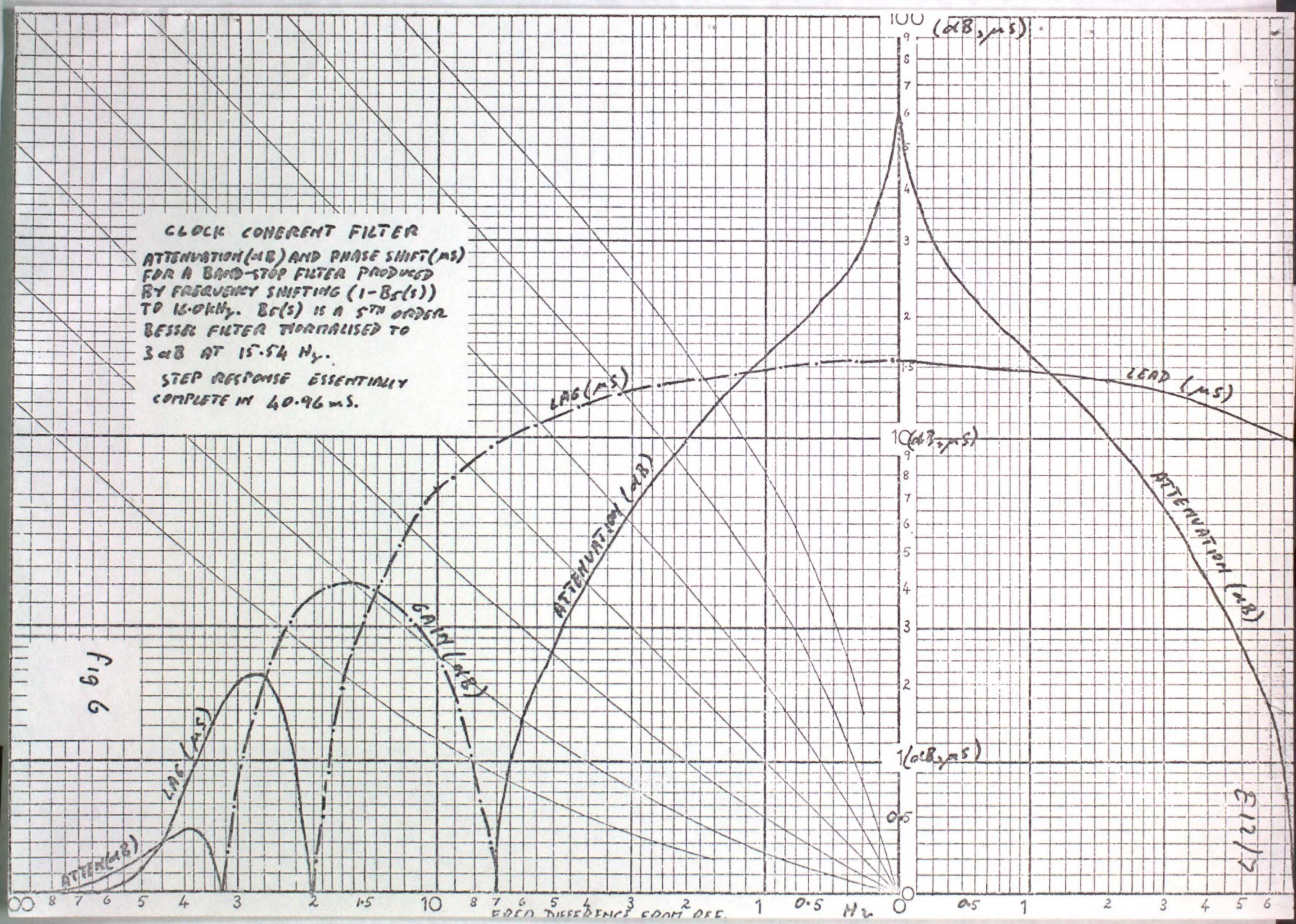
CLOCK COHERENT FILTER
ATTENUATION (dB) AND PHASE SHIFT (μS) FOR A BAND-STOP FILTER PRODUCED BY FREQUENCY SHIFTING (1 − B5(s)) TO 16.0 kHz. B5(s) IS A 5TH ORDER BESSEL FILTER NORMALISED TO 3 dB AT 15.54 Hz.
STEP RESPONSE ESSENTIALLY COMPLETE IN 40.96 mS.
LAG (μS)
LEAD (μS)
ATTENUATION (dB)
GAIN (dB)
ATTEN (dB)
100 (dB, μS)
10 (dB, μS)
1 (dB, μS)
0.5
0
FREQ DIFFERENCE FROM REF.
Hz
E12/7

Fig 6